FLOWINGWater SERIES
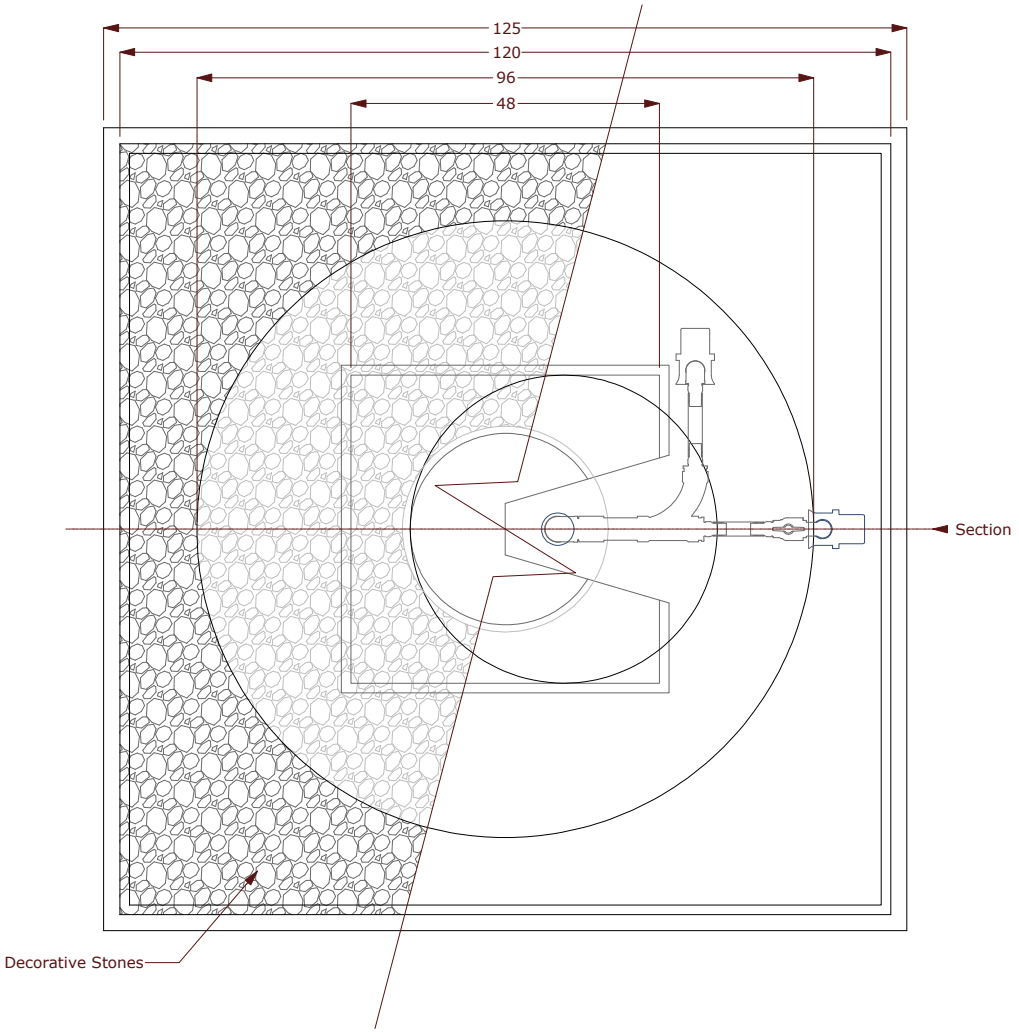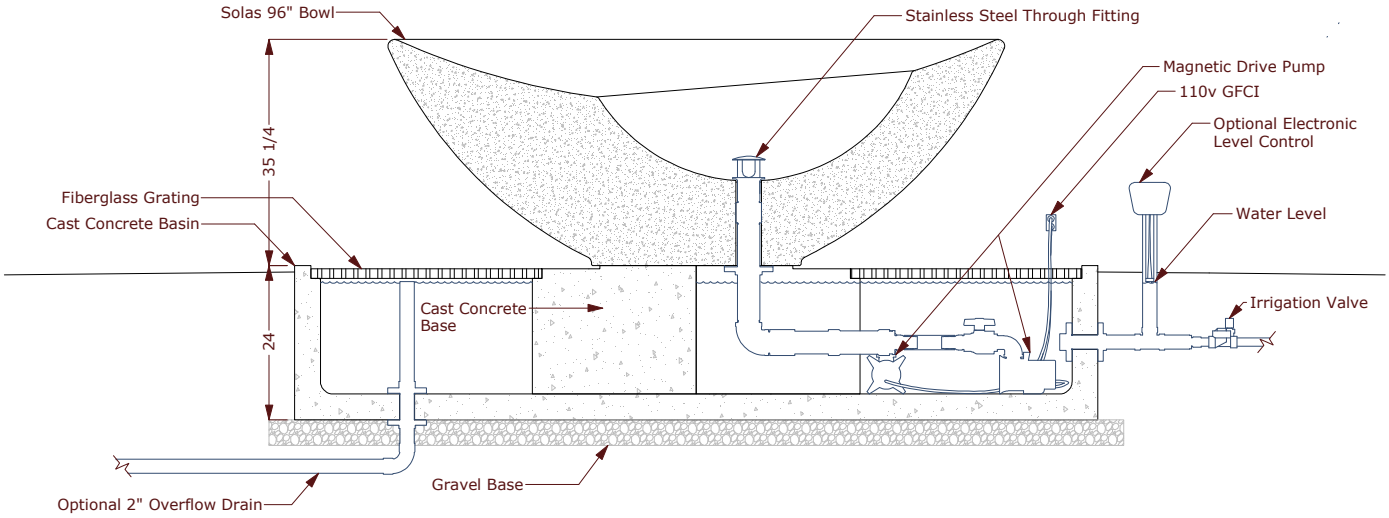
Solas 96